conecto

DOWEL 10NA40-5D

TECHNICAL DATA SHEET

DOWEL 10NA40-5D L-SHAPE

DOWEL 10NA40-5D CROSS-SHAPE

DOWEL 10NA40-5D T-SHAPE

Expansion strips are mounted in concrete floor plates to compensate movements in plate sections. Concrete plates are exposed to internal and external pressures. Damage occurs mainly at the edges of plates near to connections. Connection of floor plates should compensate their mutual horizontal movements (perpendicular and parallel to the expansion joint) which are usually caused by thermal expansion and shrinkage of concrete. At the same time the connection must also block vertical movements and mutual curving of floor elements which is a consequence of traffic, heavy loads and uneven passive earth pressure.

Dowel plate movements:

- dowel size 180x120x8mm ±15mm parallel and ±20mm perpendicular
- dowel size 180x140x10mm ±20mm parallel and ±30mm perpendicular

Conecto Dowel expansion joints ensure an even distribution of the loads between floor plates by preventing excessive local tensions. Expansion joints help to eliminate the main reason behind uncontrolled floor cracking, they make the floor last longer and improve use comfort.

The number of expansion joints should allow to divide the floor into regular fields, with a shape similar to a square of up to 1000m^2, which constitutes a daily flooring efficiency. Joints should be spaced at a distance not greater than 45x45m.
The system is complete, easy to install and ready for application, all you should do is place the joint at the installation site and join them without wrenches, using screws with wing nuts provided in the package.

Conecto Dowel joints guarantee proper resistance in case of permanent high traffic loads.

Places of application

industrial floors	logistics and distribution centers	industrial buildings	industrial storage facilities	airports

DOWEL 10NA40-5D

TECHNICAL DATA SHEET

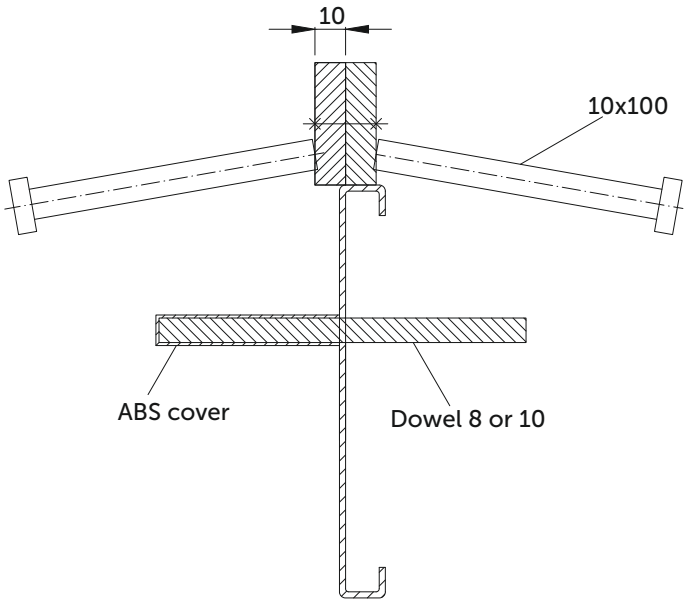

- Possibility to use flat bars size 6x40mm or 8x40mm
- Possibility to prepare top bars made of galvanized steel or stainless steel
- Possibility to use foam 5mm or 10mm in whole height
- Very big surface of steel dowel standard size 180x120x8, possibility to use dowels - 180x140x10
- Standard space between dowels 600mm (5D)
- Possibility to use more dowels per one joint (6D, 7D) to increase max loads on floor
- Standard grade steel S355
- Plastic cover made of highly resistant ABS plastic

Floor height [mm]	Profile height [mm]	Dowel size [mm]	Dowel spacing [mm]	kg/m
100-110	90	180x120x8	600	10,6
110-130	100			10,76
135-155	125			11,16
160-185	155			11,64
185-205	175			11,96
210-230	200			12,36
235-255	225			12,76
260-280	250			13,16
285-305	275			13,56
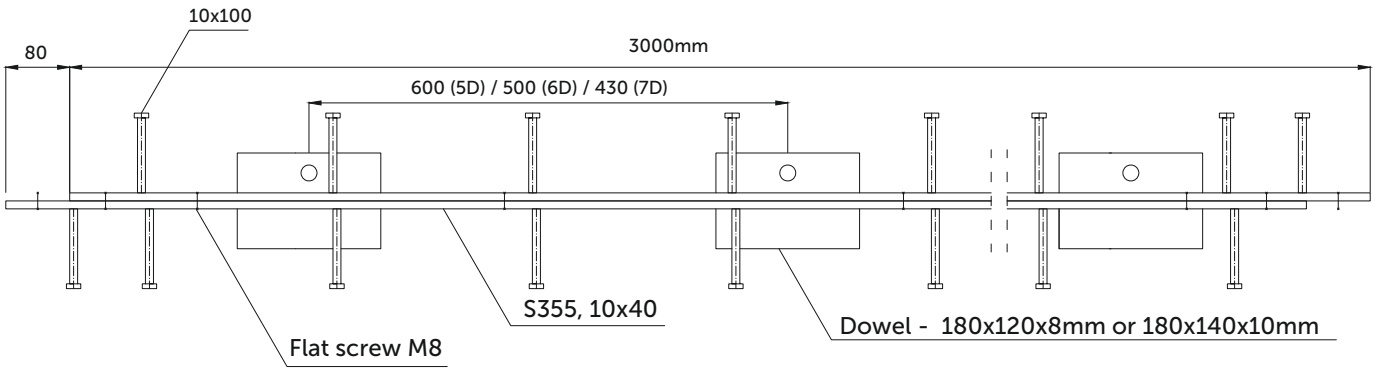
- possibility to prepare profiles in any height (every 5mm)
- possibility to prepare profiles of height 50mm, 60mm, 70mm, 80mm
- standard lenght 3 meters